Drawing courtesy of
Allen Stanley, Railroad Data Exchange
Edited by Donnie Dixon 01 2010

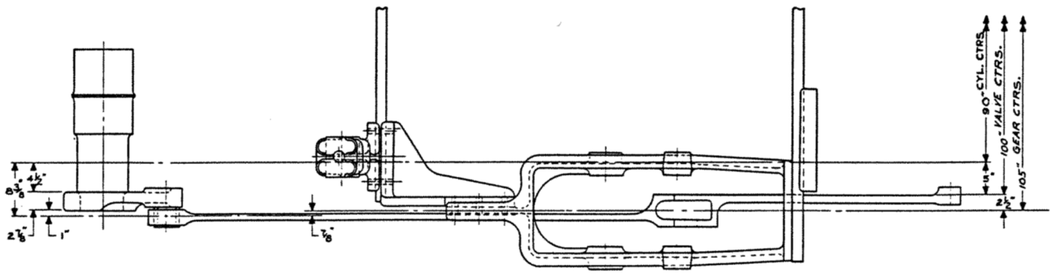

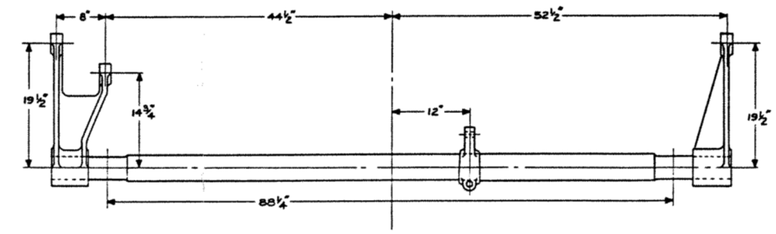

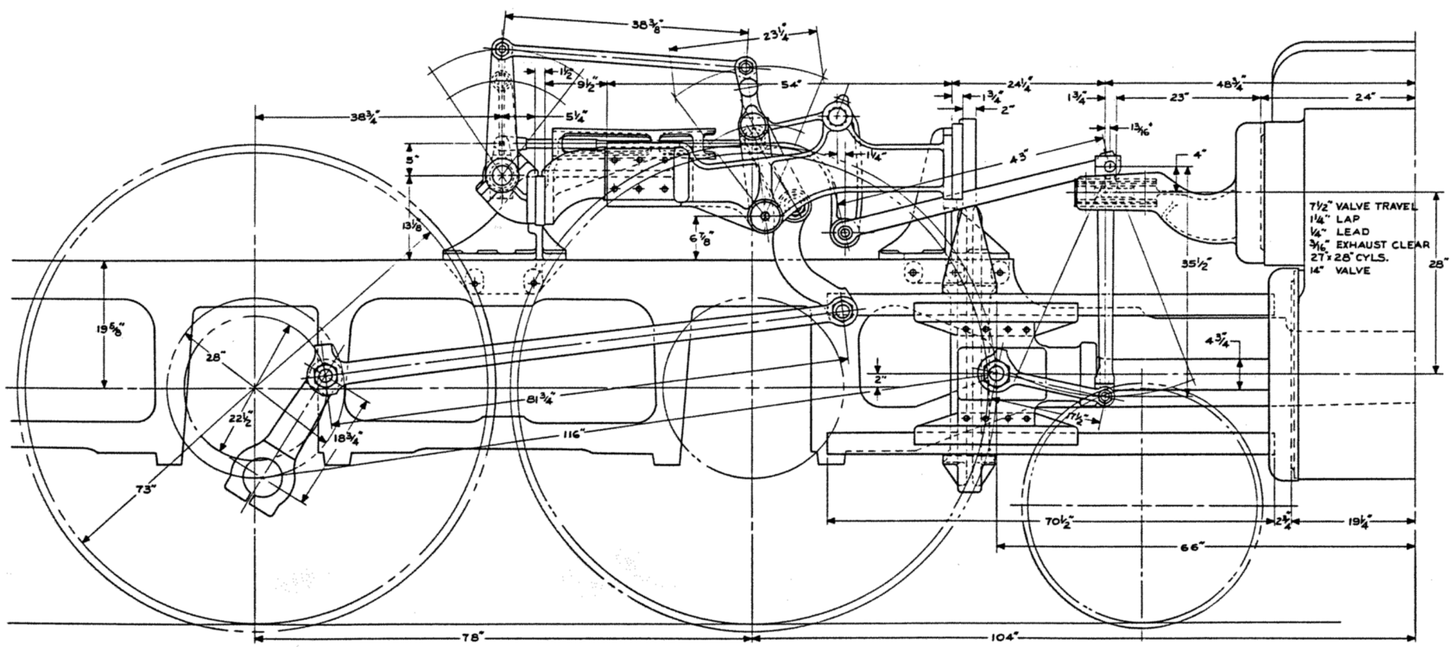

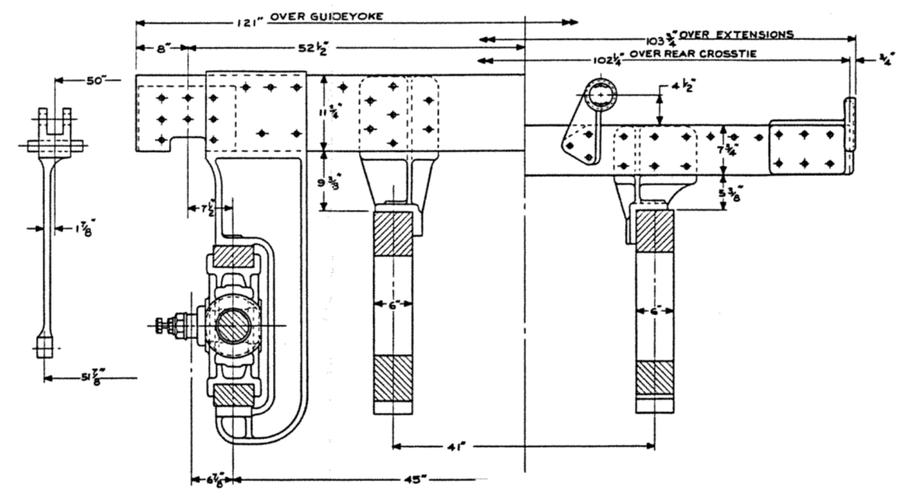

SOUTHERN RAILWAY DRAWING
SL-5080

BAKER VALVE GEAR
Locomotives 1366-1404, 6471-6482, 6684-6691