Standard Plans

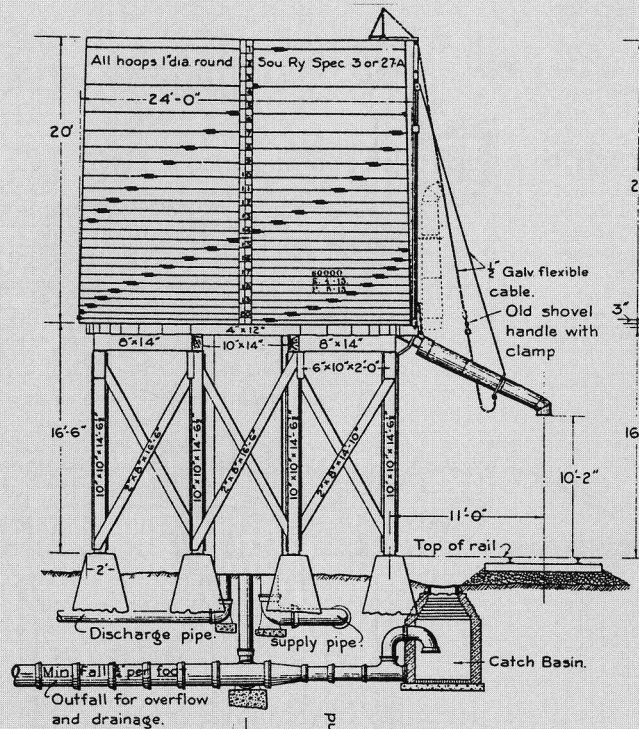

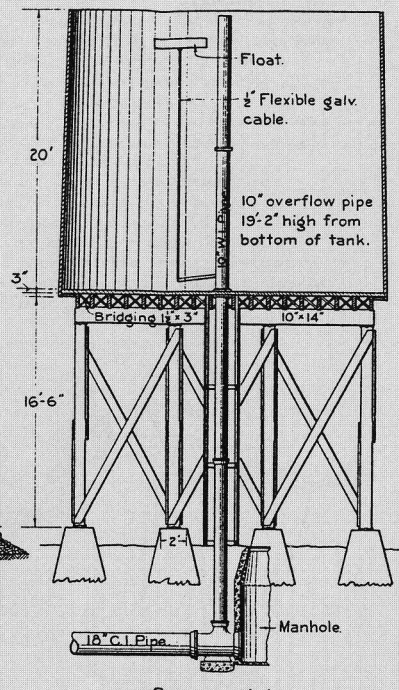

Section A-A

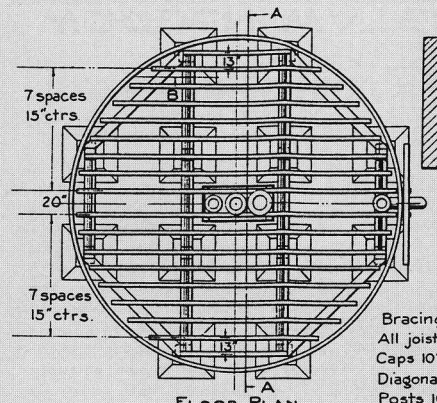

Floor Plan

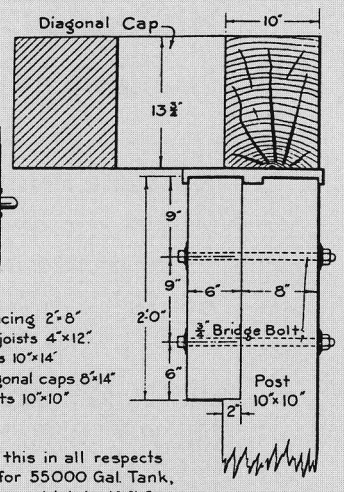

Detail at B.

Bracing 2"×8"
All joists 4"×12"
Caps 10"×14"
Diagonal caps 8"×14"
Posts 10"×10"

N. B.

Tanks under 60000 Gals. are similar to this in all respects except number of hoops which are 17 for 55000 Gal. Tank, 14 for 48000 Gal. Tank, and length of stave which is 18 ft. for 55000 and 16 ft. for 48000 Gal. Tanks.

Notes:

1 - All bracing to be fastened with ¾" bolts & malleable washers.
2 - Footings to be 1:3:6 concrete carried down to firm foundations.
3 - Locations shown for discharge and supply pipe lines illustrative only.
4 - All tubs must conform to Sou. Ry. Specifications of May 1913.
5 - Paint tub standard green; trim hoops and rigging of superstructure with standard bridge black, except gauge board which must be white with black figures.
6 - Stencil capacity, date erected and date painted, in white on each side in position as indicated.
7 - All sawn ends or sized surfaces of framing timbers to have hot creosote oil thoroughly applied.
8 - The catch basin may be built entirely of concrete, brick being preferable where available.
9 - Float valve is to be used when commercial water supply is taken direct from mains.
10 - Framing and floor-system to be of creosoted timber throughout.

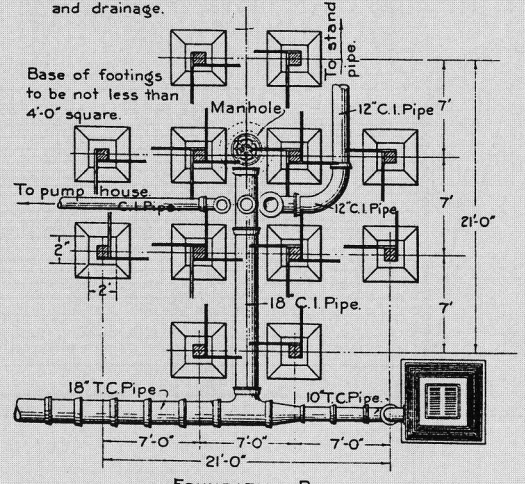

Foundation Plan

Caution:

Tank hoops must not be drawn tight until staves have thoroughly soaked with full tank of water for at least 72 hours.

Foundations shown broken to indicate view of pipe lines in elevation. (See note 2.)

Manhole for tank floors, former standard, is voided. To remove mud from tank unscrew overflow riser at bottom flanged connection and dump the refuse out into sewer. Thoroughly flush the mud from sewer before replacing riser.

At points north of Columbia, Atlanta and Birmingham, riser box of 2" creosoted planking to be constructed and packed with shavings or sawdust.

SOUTHERN RAILWAY

STANDARD 1913 CHIEF ENG. M.W.S.

WOODEN WATER TANK

60000 GALLONS AND UNDER

CORRECT:	APPROVED:	APPROVED:
H. Gallin	B. Herman.	E. Chapman
ASST. CHIEF ENG'R. M.W. & S.	CHIEF ENGINEER M.W. & S.	VICE PRES. & GEN'L. MGR.