Mainline Modeler Magazine August 1983
Used by permission R.L. Hundman

Central of Georgia Baldwin P-2 4-6-2

Drawn Expressly for
MAINLINE MODELER by
ROBERT L. HUNDMAN
Copies of these drawings may be made
for non commercial use only.
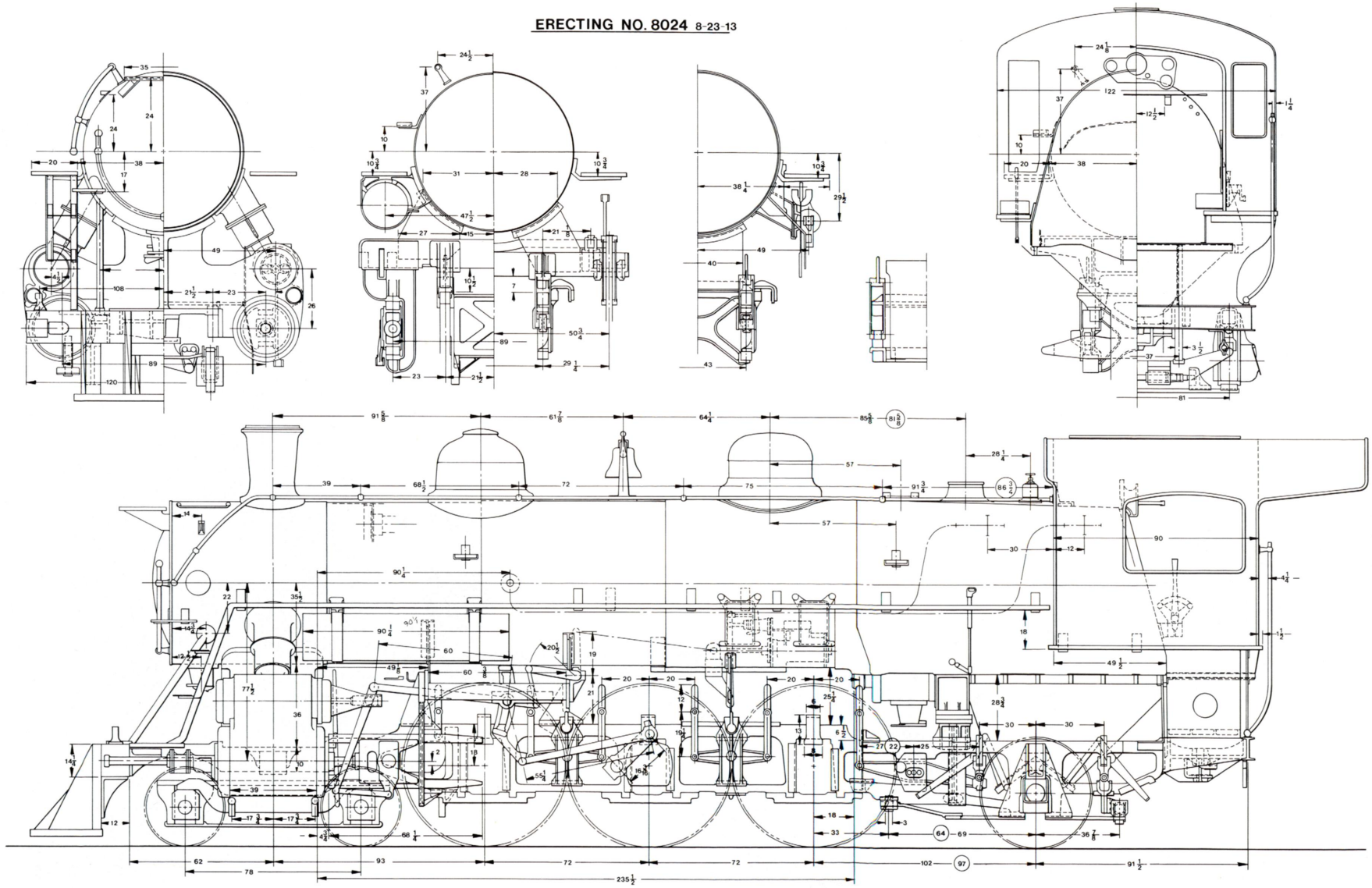
Scale 3/16" = 1'